**Features:**

Supports 9.95Gb/s to 11.3Gb/s bit rates

Hot-pluggable XFP footprint

Single LC for Bi-directional Transmission

Maximum link length of 10km

Single 3.3V voltage supply

Uncooled 1330nm CWDM DFB Laser

Power dissipation < 2.5W

No Reference Clock required

Built-in digital diagnostic functions

Temperature range 0°C to 70°C

Very low EMI and excellent ESD protection

RoHS Compliant

**Applications:**

10GBASE-LR/LW Ethernet

SONET OC-192 /SDH STM-64

1200-SM-LL-L 10G Fibre Channel

**Description:**

NBX-3327192-01CD Bi-directional 10Gb/s (XFP) transceivers are compliant with the current XFP Multi-Source Agreement (MSA) Specification. They comply with 10-Gigabit Ethernet 10GBASE-LR/LW per IEEE 802.3ae, SONET OC-192 /SDH STM-64 and 10G Fibre Channel

1200-SM-LL-L. Digital diagnostics functions are available via a 2-wire serial interface, as specified in the XFP MSA.

## Absolute Maximum Ratings

| Parameter | Symbol | Min | Max | Unit |
|---|---|---|---|---|
| Storage Temperature | $T_{ST}$ | -40 | +85 | ℃ |
| Case Operating Temperature | Tc | 0 | +70 | ℃ |
| Supply Voltage | $V_{CC}$ | -0.5 | +4.0 | V |

## Electrical Characteristics ($T_{OP}$ =Tc)

| Parameter | Symbol | Min | Typ | Max | Unit | Note |
|---|---|---|---|---|---|---|
| Supply Voltage | Vcc | 3.13 | | 3.45 | V | |
| Supply Current | Icc | | | 500 | mA | |
| Module total power | P | | | 2.5 | W | |
| **Transmitter** | | | | | | |
| Input differential impedance | Rin | | 100 | | Ω | 1 |
| Differential data input swing | Vin,pp | 150 | | 820 | mV | |
| Transmit Disable Voltage | $V_D$ | 2.0 | | Vcc | V | |

| | | | | | | |
|---|---|---|---|---|---|---|
| Transmit Enable Voltage | $V_{EN}$ | GND | | GND+0.8 | V | |
| Transmit Disable Assert Time | T_off | | | 100 | ms | |
| Tx Enable Assert Time | T_on | | | 100 | ms | |
| **Receiver** | | | | | | |
| Differential data output swing | Vout,pp | 300 | 500 | 850 | mV | |
| Data output rise time | tr | | | 35 | ps | 2 |
| Data output fall time | tf | | | 35 | ps | 2 |
| LOS Fault | $V_{LOS\ fault}$ | Vcc – 0.5 | | $Vcc_{HOST}$ | V | 3 |
| LOS Normal | $V_{LOS\ norm}$ | GND | | GND+0.5 | V | 3 |
| Power Supply Rejection | PSR | See Note 4 below | | | | 4 |

**Notes**

1. After internal AC coupling.
2. 20 – 80 %
3. Loss of Signal is open collector to be pulled up with a 4.7k – 10kohm resistor to 3.15 – 3.6V. Logic 0 indicates normal operation; logic 1 indicates no signal detected.
4. Per Section 2.7.1. in the XFP MSA Specification.

## Optical Characteristics ($T_{OP}$ =Tc)

| Parameter | Symbol | Min | Typ | Max | Unit | Ref. |
|---|---|---|---|---|---|---|
| **Transmitter** | | | | | | |
| Operating Date Rate | BR | 9.95 | | 11.3 | Gb/s | |
| Bit Error Rate | BER | | | $10^{-12}$ | | |
| Maximum Launch Power | $P_{MAX}$ | -6 | | -1 | dBm | 1 |
| Optical Center Wavelength | λ | 1320 | 1330 | 1340 | nm | |
| Optical Extinction Ratio | ER | 3.5 | | | dB | |
| Spectral Width | Δλ | | | 1 | nm | |
| Side mode Suppression ratio | $SMSR_{min}$ | 30 | | | dB | |
| Rise/Fall Time (20%~80%) | Tr/Tf | | | 50 | ps | |
| Average Launch power of OFF Transmitter | $P_{OFF}$ | | | -30 | dBm | |
| Tx Jitter | Txj | Compliant with each standard requirements | | | | |
| Optical Eye Mask | | IEEE802.3ae | | | | 2 |
| **Receiver** | | | | | | |
| Operating Date Rate | BR | 9.95 | | 11.3 | Gb/s | |
| Receiver Sensitivity | Sen | | | -14 | dBm | 2 |
| Maximum Input Power | $P_{MAX}$ | 0 | | | dBm | 2 |
| Optical Center Wavelength | $\lambda_C$ | 1260 | 1270 | 1280 | nm | |
| Receiver Reflectance | Rrx | | | -27 | dB | |
| LOS De-Assert | $LOS_D$ | | | -15 | dBm | |
| LOS Assert | $LOS_A$ | -30 | | | dBm | |
| LOS Hysteresis | $LOS_H$ | 0.5 | | 5 | dB | |

**Notes:**

1. The optical power is launched into SMF.
2. Measured with a PRBS $2^{31}$-1 test pattern @10.3125Gbps BER<$10^{-12}$.

## Pin Assignment:

Diagram of Host Board Connector Block Pin Numbers and Name

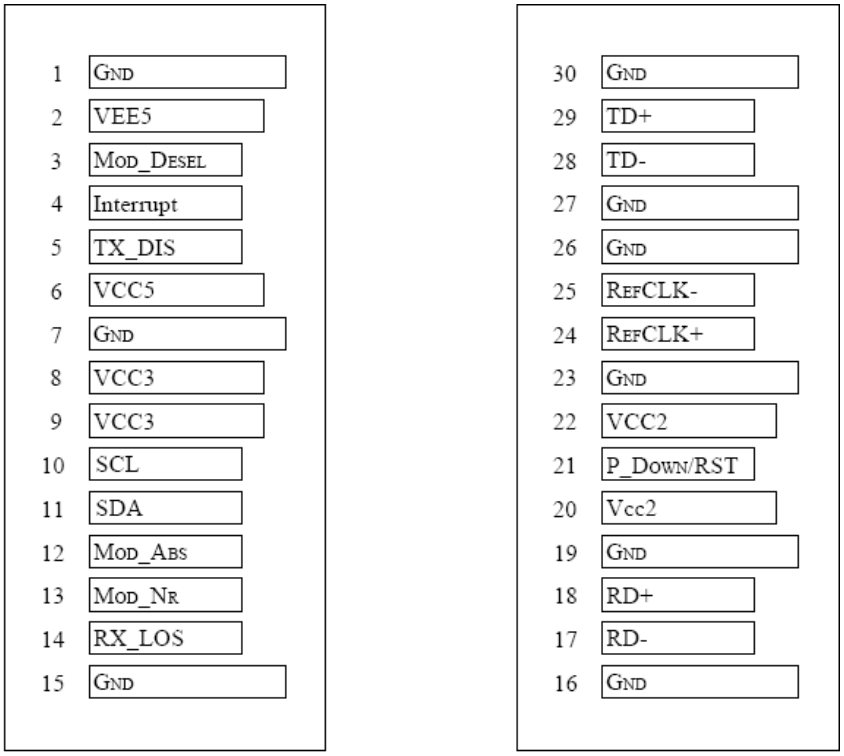


Bottom of Board
(As view through top of board)

Top of Board

## Pin Function Definitions

| Pin | Logic | Symbol | Name/Description | Ref. |
|---|---|---|---|---|
| 1 | | GND | Module Ground | 1 |
| 2 | | VEE5 | Optional –5.2 Power Supply – Not required | |
| 3 | LVTTL-I | Mod-Desel | Module De-select; When held low allows the module to respond to 2-wire serial interface commands | |
| 4 | LVTTL-O | $\overline{\text{Interrupt}}$ | Interrupt (bar); Indicates presence of an important condition which can be read over the serial 2-wire interface | 2 |
| 5 | LVTTL-I | TX_DIS | Transmitter Disable; Transmitter laser source turned off | |
| 6 | | VCC5 | +5 Power Supply | |
| 7 | | GND | Module Ground | 1 |
| 8 | | VCC3 | +3.3V Power Supply | |
| 9 | | VCC3 | +3.3V Power Supply | |
| 10 | LVTTL-I | SCL | Serial 2-wire interface clock | 2 |
| 11 | LVTTL-I/O | SDA | Serial 2-wire interface data line | 2 |
| 12 | LVTTL-O | Mod_Abs | Module Absent; Indicates module is not present. Grounded in the module. | 2 |
| 13 | LVTTL-O | Mod_NR | Module Not Ready; | 2 |
| 14 | LVTTL-O | RX_LOS | Receiver Loss of Signal indicator | 2 |
| 15 | | GND | Module Ground | 1 |
| 16 | | GND | Module Ground | 1 |
| 17 | CML-O | RD- | Receiver inverted data output | |

| | | | | |
|---|---|---|---|---|
| 18 | CML-O | RD+ | Receiver non-inverted data output | |
| 19 | | GND | Module Ground | 1 |
| 20 | | VCC2 | +1.8V Power Supply – Not required | |
| 21 | LVTTL-I | P_Down/RST | Power Down; When high, places the module in the low power stand-by mode and on the falling edge of P_Down initiates a module reset | |
| | | | Reset; The falling edge initiates a complete reset of the module including the 2-wire serial interface, equivalent to a power cycle. | |
| 22 | | VCC2 | +1.8V Power Supply – Not required | |
| 23 | | GND | Module Ground | 1 |
| 24 | PECL-I | RefCLK+ | Reference Clock non-inverted input, AC coupled on the host board – Not required | 3 |
| 25 | PECL-I | RefCLK- | Reference Clock inverted input, AC coupled on the host board – Not required | 3 |
| 26 | | GND | Module Ground | 1 |
| 27 | | GND | Module Ground | 1 |
| 28 | CML-I | TD- | Transmitter inverted data input | |
| 29 | CML-I | TD+ | Transmitter non-inverted data input | |
| 30 | | GND | Module Ground | 1 |

**Note**

1. Module circuit ground is isolated from module chassis ground within the module.
2. Open collector; should be pulled up with 4.7k – 10k ohms on host board to a voltage between 3.15Vand 3.45V.
3. A Reference Clock input is not required.

## Digital Diagnostic Functions

As defined by the XFP MSA 1, XFP transceivers provide digital diagnostic functions via a 2-wire serial interface, which allows real-time access to the following operating parameters:

- ✓ Transceiver temperature
- ✓ Laser bias current
- ✓ Transmitted optical power
- ✓ Received optical power
- ✓ Transceiver supply voltage

It also provides a sophisticated system of alarm and warning flags, which may be used to alert end-users when particular operating parameters are outside of a factory-set normal range.

The operating and diagnostics information is monitored and reported by a Digital Diagnostics Transceiver Controller (DDTC) inside the transceiver, which is accessed through the 2-wire serial interface. When the serial protocol is activated, the serial clock signal (SCL pin) is generated by the host. The positive edge clocks data into the XFP transceiver into those segments of its memory map that are not write-protected. The negative edge clocks data from the XFP transceiver. The serial data signal (SDA pin) is bi-directional for serial data transfer. The host uses SDA in conjunction with SCL to mark the start and end of serial protocol activation. The memories are organized as a series of 8-bit data words that can be addressed individually or sequentially. The 2-wire serial interface provides sequential or random access to the 8 bit parameters, addressed from 000h to the maximum address of the memory.

For more detailed information including memory map definitions, please see the XFP MSA Specification.

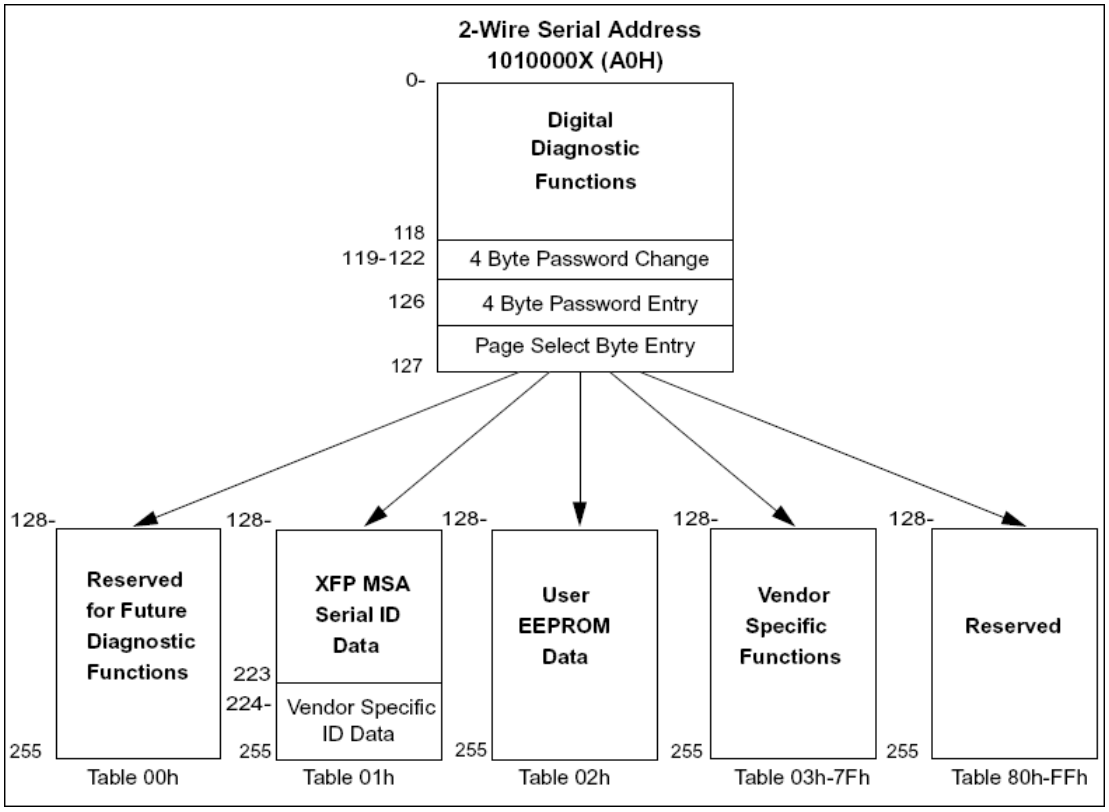


## Recommended Circuit:

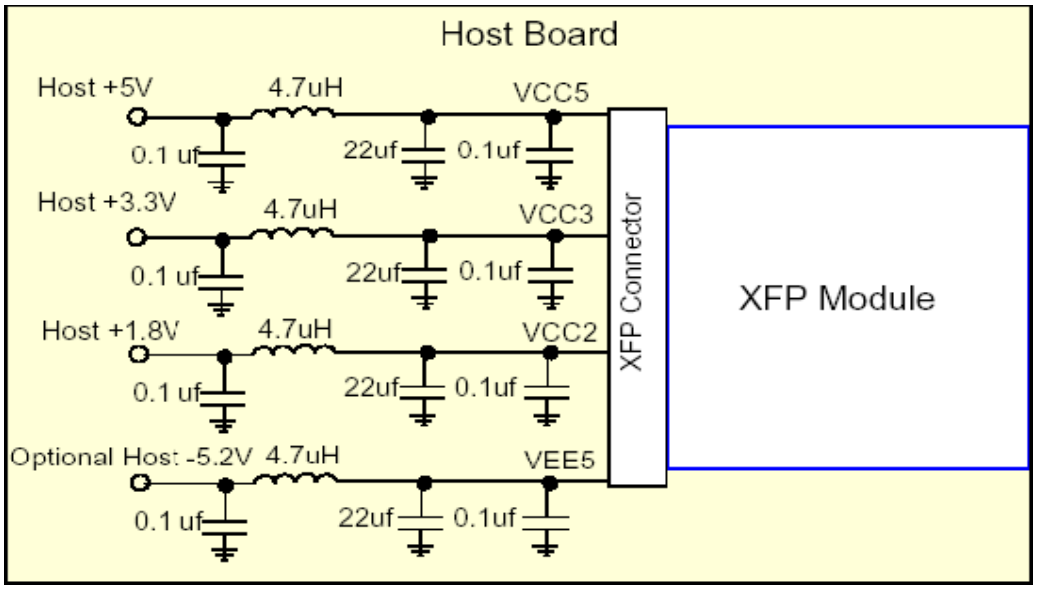


**Recommended Host Board Power Supply Circuit**

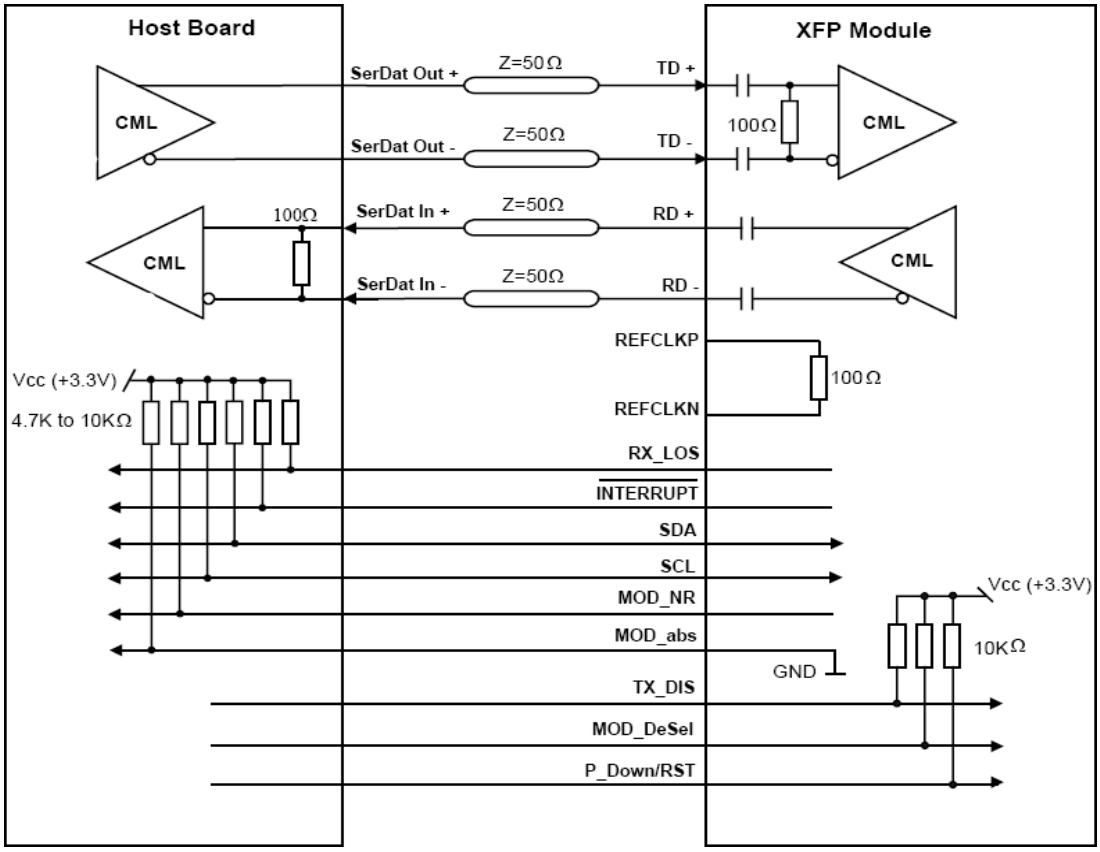


**Recommended High-speed Interface Circuit**
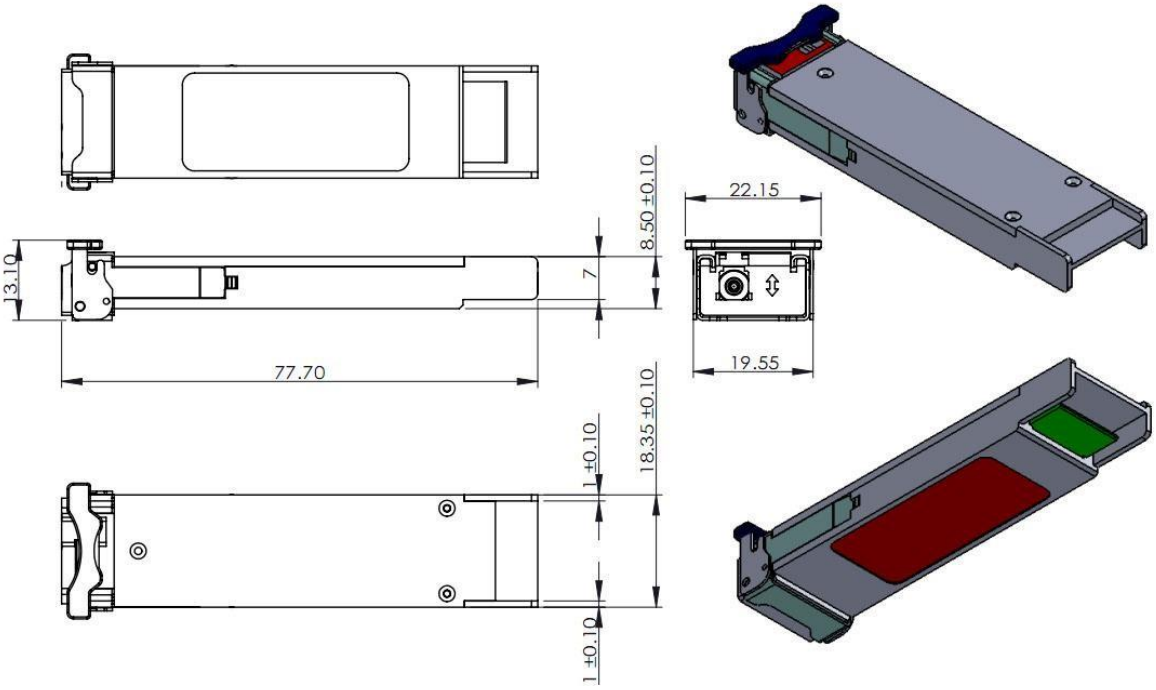
## Mechanical Dimensions: