Features:

Hot pluggable QSFP28 MSA form factor

Supports 103.1Gb/s aggregate bit rate

Up to 2km reach for G.652 SMF

Single +3.3V power supply

Operating case temperature: 0~70°C

Receiver: 4x25Gb/s PIN ROSA

4x25G electrical interface (OIF CEI-28G-VSR)

Maximum power consumption 3..5W

Duplex LC receptacle

RoHS compliant

Applications:

Data Center Interconnect.

100G CWDM4 applications.

InfiniBand EDR interconnects.

Enterprise networking

Part Number Ordering Information

NQS-S100-L02	QSFP28 CWDM4 (Ethernet) 2km optical transceiver with full real-time digital diagnostic monitoring

General Description

NQS-S100-L02 is a 100Gb/s transceiver module designed for optical communication applications, compliant with the QSFP MSA, CWDM4 MSA and portions of IEEE P802.3bm standard. The module converts 4 input channels of 25Gb/s electrical data to 4 channels of CWDM optical signals and then multiplexes them into a single channel for 100Gb/s optical transmission. Reversely on the receiver side, the module de-multiplexes a 100Gb/s optical input into 4 channels of CWDM optical signals and then converts them to 4 output channels of electrical data.

The central wavelengths of the 4 CWDM channels are 1271, 1291, 1311 and 1331 nm as members of the CWDM wavelength grid defined in CWDM4 MSA. The high-performance Uncooled CWDM DFB transmitters and high sensitivity PIN receivers provide superior performance for 100-Gigabit Ethernet applications up to 2km links. The product has been designed to meet the harshest external operating conditions including temperature, humidity and EMI interference.

Transceiver Block Diagram

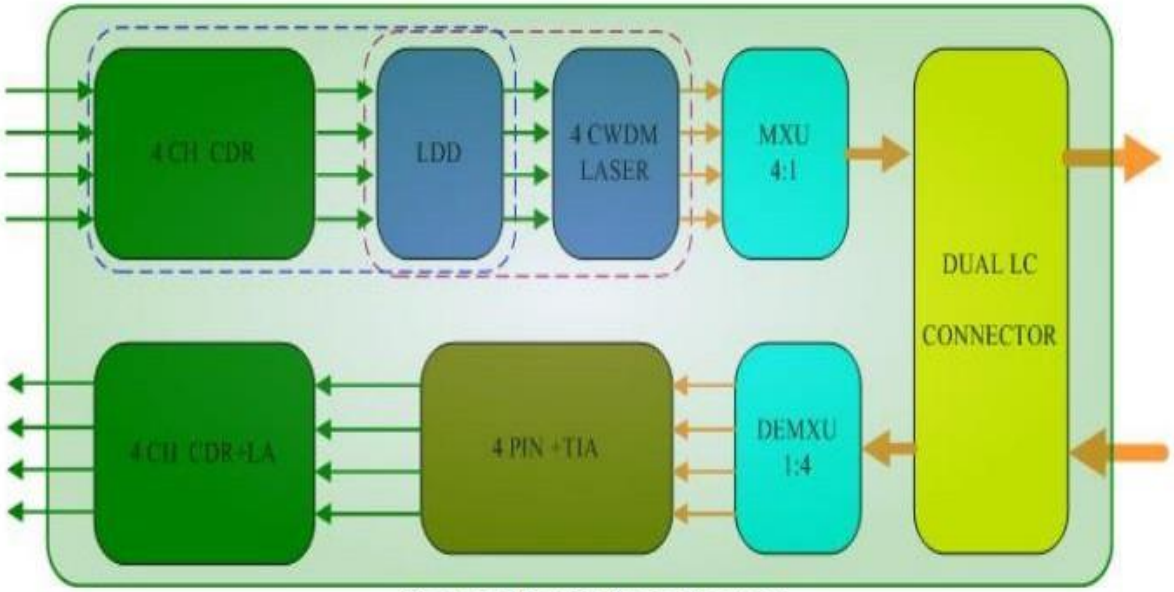

Figure1. Module Block Diagram

Pin Assignment and Description

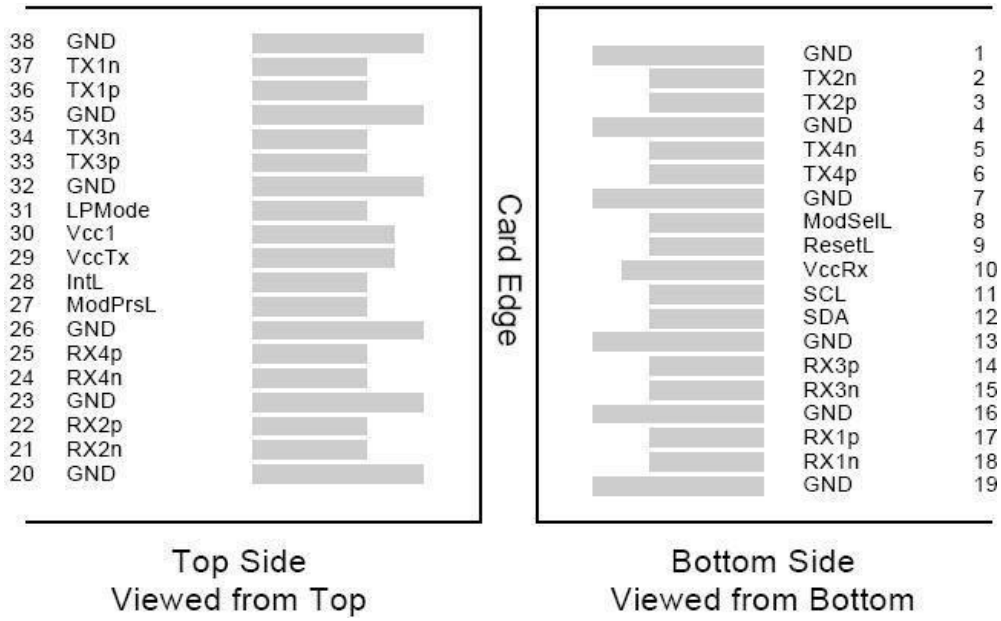

Figure 2. MSA Compliant Connector

Pin Definition

PIN	Logic	Symbol	Name/Description	Notes
1		GND	Ground	1
2	CML-I	Tx2n	Transmitter Inverted Data Input	
3	CML-I	Tx2p	Transmitter Non-Inverted Data output	
4		GND	Ground	1
5	CML-I	Tx4n	Transmitter Inverted Data Input	
6	CML-I	Tx4p	Transmitter Non-Inverted Data output	

7		GND	Ground	1
8	LVTLL-I	ModSelL	Module Select	
9	LVTLL-I	ResetL	Module Reset	
10		VccRx	+3.3V Power Supply Receiver	2
11	LVCMOS-I/O	SCL	2-Wire Serial Interface Clock	
12	LVCMOS-I/O	SDA	2-Wire Serial Interface Data	
13		GND	Ground	
14	CML-O	Rx3p	Receiver Non-Inverted Data Output	
15	CML-O	Rx3n	Receiver Inverted Data Output	
16		GND	Ground	1
17	CML-O	Rx1p	Receiver Non-Inverted Data Output	
18	CML-O	Rx1n	Receiver Inverted Data Output	
19		GND	Ground	1
20		GND	Ground	1
21	CML-O	Rx2n	Receiver Inverted Data Output	
22	CML-O	Rx2p	Receiver Non-Inverted Data Output	
23		GND	Ground	1
24	CML-O	Rx4n	Receiver Inverted Data Output	1
25	CML-O	Rx4p	Receiver Non-Inverted Data Output	
26		GND	Ground	1
27	LVTTL-O	ModPrsL	Module Present	
28	LVTTL-O	IntL	Interrupt	
29		VccTx	+3.3 V Power Supply transmitter	2
30		Vcc1	+3.3 V Power Supply	2
31	LVTTL-I	LPMode	Low Power Mode	
32		GND	Ground	1
33	CML-I	Tx3p	Transmitter Non-Inverted Data Input	
34	CML-I	Tx3n	Transmitter Inverted Data Output	
35		GND	Ground	1
36	CML-I	Tx1p	Transmitter Non-Inverted Data Input	
37	CML-I	Tx1n	Transmitter Inverted Data Output	
38		GND	Ground	1

Notes:

1. GND is the symbol for signal and supply (power) common for the QSFP28 module. All are common

within the module and all module voltages are referenced to this potential unless otherwise noted. Connect these directly to the host board signal common ground plane.

2. VccRx, Vcc1 and VccTx are the receiving and transmission power suppliers and shall be applied concurrently. Recommended host board power supply filtering is shown in Figure 3 below. Vcc Rx, Vcc1 and Vcc Tx may be internally connected within the module in any combination. The connector pins are each rated for a maximum current of 1000mA.

Recommend Power Supply Filter

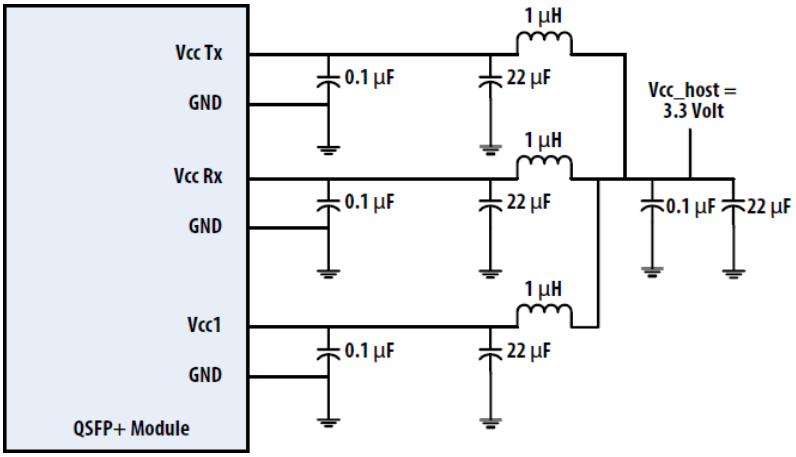

Figure 3. Recommended Power Supply Filter

Absolute Maximum Ratings

It has to be noted that the operation in excess of any individual absolute maximum ratings might cause permanent damage to this module.

Parameter	Symb	Min	Typ	Max	Unit	Ref
Maximum Supply Voltage	Vcc	-0.5		3.6	V	
Storage Temperature	TS	-40		+85	C	
Case Operating Temperature	TOP	0		+70	C	
Relative Humidity	RH	15		85	%	1
Receiver Damage Threshold, per	PRdmg	3.5			dBm	

Notes:

1. Non-condensing.

Electrical Characteristics(TOP = 0 to +70℃ VCC = 3. 15 to 3. 45 Volts)

The following electrical characteristics are defined over the Recommended Operating Environment unless otherwise specified

Parameter	Symbol	Min	Typ	Max	Unit	Ref.
Supply Voltage	Vcc	3. 5		3. 5	V	
Supply Current	Icc			1.2	A	
Module total power	P			3.5	W	1
Transmitter						
Signaling rate per lane		25.78125 ± 100 ppm			GBd	
Differential data input swing per lane	Vin,pp			900	mV	
Differential input return loss (min)	RLd(f)	9.5 – 0.37f, 0.01≤f<8 4.75 – 7.4log10(f/14), 8 ≤f<19			dB	
Differential to common mode input return loss (min)	RLdc(f)	22-20(f/25.78), 0.01≤f<12.89 15-6(f/25.78), 12.89≤f<19			dB	
Differential termination mismatch				10	%	
Stressed input parameters						
Eye width			0.46		UI	
Applied pk-pk sinusoidal jitter		Per IEEE 802.3bm Table 88-13				
Eye height			95		mV	
DC common mode voltage		-350		2850	mV	
Receiver						
Signaling rate per lane		25.78125 ± 100 ppm			GBd	
Differential data output swing	Vout,pp	100		400	mVpp	2
		300		600		
		400		800		
		600		1200		
Eye width		0.57			UI	
Vertical eye closure				5.5	dB	
Differential output return loss (min)	RLd(f)	9.5 – 0.37f, 0.01≤f<8 4.75 – 7.4log10(f/14), 8 ≤f<19			dB	
Common to differential mode conversion return loss (min)	RLdc(f)	22-20(f/25.78), 0.01≤f<12.89 15-6(f/25.78), 12.89≤f<19			dB	
Differential termination mismatch				10	%	
Transition time, 20% to 80%	tr tf	12			ps	

Notes:

1 Maximum total power value is specified across the full temperature and voltage range. Power consumption

≤ 3.5W when stabilized, but may be > 3.5W during locking acquisition.

2 Output voltage is settable in 4 discrete ranges via I2C. Default range is Range 2 (400 – 800 mV).

Optical Characteristics (, TOP = 0 to +70 ℃, VCC = 3.15 to 3.45 Volts)

Parameter	Symbol	Min	Typ	Max	Unit	Ref
Transmitter						
Signaling Speed per Lane		25.78125 ±100 ppm			Gb/s	1
Lane center wavelengths (range)		1264.5 – 1277.5 1284.5 – 1297.5 1304.5 – 1317.5 1324.5 – 1337.5			nm	
Transmit OMA per Lane	TxOMA1	-4		2.5	dBm	
Transmit OMA per Lane @TDP max	TxOMA2	-2			dBm	2
Transmit Average Power per Lane	PAVG	-6.5		2.5	dBm	8
Optical Extinction Ratio	ER	3.5			dB	
Transmitter and Dispersion Penalty per Lane	TDP			3	dB	3
Launch Power (OMA-TDP)	OMA- TDP	-5			dBm	
Sidemode Suppression ratio	SSRmin	30			dB	
Average launch power of OFF transmitter, per lane				-30	dBm	
Transmitter Reflectance				-12	dB	
Transmitter eye mask definition {X1, X2, X3, Y1, Y2, Y3}		{0.31, 0.4, 0.45, 0.34, 0.38, 0.4}				4
Receiver						
Signaling Speed per Lane		25.78125 ±100 ppm			Gb/s	5
Lane center wavelengths (range)		1264.5 – 1277.5 1284.5 – 1297.5 1304.5 – 1317.5 1324.5 – 1337.5			nm	
Receive Saturation (OMA) per Lane	Rmax	2.5			dBm	
Damage threshold per Lane		3.5			dBm	
Unstressed Receiver Sensitivity (OMA) per Lane	Rxsens			-11.5	dBm	6

Stressed Receiver Sensitivity (OMA) per Lane	SRS			-7.3	dBm	7
Conditions of stressed receiver sensitivity test:						
Vertical Eye Closure Penalty	VECP	1.9			dB	
Stressed J2 Jitter	J2	0.33			UI	
Stressed J4 Jitter	J4	0.48			UI	
SRS eye mask definition {X1, X2, X3, Y1, Y2, Y3}		{0.39, 0.5, 0.5, 0.39, 0.39, 0.4}				
LOS De-Assert	LOSD			-13	dBm	
LOS Assert	LOSA	-24			dBm	
LOS Hysteresis		0.5		6	dB	

Notes:

1 Transmitter consists of 4 lasers operating at 25.78Gb/s each.

2 At maximum TDP.

3 TDP value does not include MPI penalty.

4 Hit ratio of 5x10-5, per IEEE.

5 Receiver consists of 4 photodetectors operating at 25.78Gb/s each.

6 Sensitivity is specified at 5x10-5 BER.

7 Measured with CWDM4 MSA2 conformance test signal at TP3 for 5x10-5 BER.

8 Power value and power accuracy are with all channels on.

Digital Diagnostic Functions

The following digital diagnostic characteristics are defined over the normal operating conditions unless otherwise specified.

Parameter	Symbol	Min	Max	Units	Notes
Temperature monitor absolute error	DMI_Temp	-3	3	degC	Over operating temperature range
Supply voltage monitor absolute error	DMI _VCC	-0.1	0.1	V	Over full operating range
Channel RX power monitor absolute error	DMI_RX_Ch	-2	2	dB	1
Channel Bias current monitor	DMI_Ibias_Ch	-10%	10%	mA	
Channel TX power monitor absolute error	DMI_TX_Ch	-2	2	dB	1

Notes:

1. Due to measurement accuracy of different single mode fibers, there could be an additional +/-1 dB fluctuation, or a +/- 3 dB total accuracy.

Mechanical Dimensions

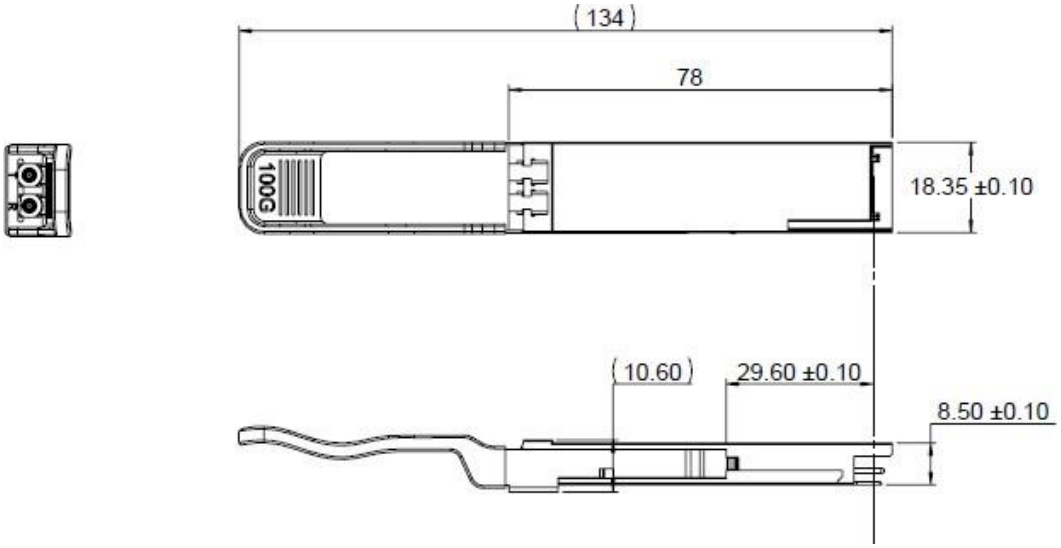

Figure 4. Mechanical Outline

ESD

This transceiver is specified as ESD threshold 1KV for high-speed data pins and 2KV for all others electrical input pins, tested per MIL-STD-883, Method 3015.4 /JESD22-A114-A (HBM). However, normal ESD precautions are still required during the handling of this module. This transceiver is shipped in ESD protective packaging. It should be removed from the packaging and handled only in an ESD protected environment.

Laser Safety

This is a Class 1 Laser Product according to EN 60825-1:2014. This product complies with 21 CFR 1040.10 and 1040.11 except for deviations pursuant to Laser Notice No. 50, dated (June 24, 2007).

Caution: Use of controls or adjustments or performance of procedures other than those specified herein may result in hazardous radiation exposure.