Features:

UP to 25.78Gb/s bit rates

Hot-Pluggable SFP28 footprint

Duplex LC connector

1310nm DFB transmitter, PIN photo- detector

Up to 300m on SMF

2-wire interface for management specifications compliant with SFF 8472 digital diagnostic monitoring interface for optical transceivers

Cost effective SFP28 solution, enables higher port densities and greater bandwidth

Power Supply: +3.3V

Low Power consumption<1.3W

Operating case temperature Range:

Commercial: 0~ 70°C

Industrial: -40~ 85°C

RoHS compliant

Applications:

25GE 300m

eCPRI & CPRI

Part Number Ordering Information

NSS-S25-L003	SFP28 300m optical transceiver with full real-time digital diagnostic monitoring, 0~70℃, 25GE
NSS-S25-L003	SFP28 300m optical transceiver with full real-time digital diagnostic monitoring, -40~85℃, 25GE

Description:

NSS-S25-L003 is a very compact optical transceiver module converts 25Gbit/s serial PECL or CML electrical data into serial optical data. The SFP28 module electrical interface is compliant to SFI electrical specifications. The DFB transmitter and PIN receiver provide superior performance for Ethernet applications at up to 300m links on SMF.

The SFP28 Module compliant with SFF-8431, SFF-8432. Digital diagnostics functions are available via a 2-wire serial interface, as specified in SFF-8472.

The fully SFP28 compliant form factor provides hot pluggability, easy optical port upgrades and low EMI emission.

Absolute Maximum Ratings

Parameter	Symbol	Min.	Typical	Max.	Unit	
Storage Temperature	T_S	-40		+85	°C	
Case Operating	Tc	0		70	°C	Commercial
Temperature	Tc	-40		85	°C	Industrial
Maximum Supply Voltage	Vcc	0		3.6	V	
Relative Humidity	RH	5		95	%	

Electrical Characteristics

Parameter	Symbol	Min.	Typical	Max.	Unit	Note
Supply Voltage	Vcc	3.135		3.465	V	
Supply Current	Icc			400	mA	
Power Consumption	P			1.3	W	
Data Rate	R	-	25.78		Gb/s	
Transmitter Section:						
Input differential impedance	R_{in}		100		Ω	1
Tx Input Single Ended DC Voltage Tolerance (Ref VeeT)	V	-0.3		4	V	
Differential input voltage swing	Vin,pp	180		450	mV	2
Transmit Disable Voltage	V_D	2		Vcc	V	3
Transmit Enable Voltage	V_{EN}	Vee		Vee+0.8	V	
Receiver Section:						
Single Ended Output Voltage Tolerance	V	-0.3		4	V	
Rx Output Diff Voltage	Vo	180		450	mV	
LOS Fault	$V_{LOS\ fault}$	2		V_{ccHOST}	V	4
LOS Normal	$V_{LOS\ norm}$	Vee		Vee+0.8	V	4

Note:

1. Connected directly to TX data input pins. AC coupling from pins into laser driver IC.
2. Per SFF-8431 Rev 3.0
3. Into 100 ohms differential termination.
4. LOS is an open collector output. Should be pulled up with 4.7k – 10kΩ on the host board. Normal operation is logic 0; loss of signal is logic 1. Maximum pull-up voltage is 5.5V

Optical Characteristics

Parameter	Symbol	Min.	Typical	Max.	Uni	N
Tranmitter Section:						
Center Wavelength	λt	1290	1310	1330	nm	
spectral width	△λ			1	nm	
Average Optical Power	Pavg	-6.8		+2.0	dBm	
Laser Off Power	Poff			-30	dBm	
Extinction Ratio	ER	3.5			dB	
Receiver Section:						
Center Wavelength	λr	1270		1360	nm	
Receiver Sensitivity(OMA)	Sen			-10.5	dBm	1
Los Assert	LOS_A	-30			dBm	
Los Dessert	LOS_D			-12.5	dBm	
Los Hysteresis	LOS_H	0.5		5	dB	
Overload	Sat	+2			dBm	

Note:

1. Measured with a PRBS 2^31-1 test pattern, @25.78Gb/s, BER<5E-5.

Timing Characteristics

Paramet	Symbol	Min.	Typical	Max.	Unit
TX_Disable Assert Time	t_off			100	us
TX_Disable Negate Time	t_on			2	ms
Time to Initialize 2-wire interface	t_2w_start_up			300	ms
Time to Initialize	t_start_up			300	ms
Time to Initialize cooled module and time to power up a cooled module to Power level II	t_start_up_cooled			90	s
Time to Power Up to Level II	t_power_level2			300	ms
Time to Power Down from Level II	t_power_down			300	ms
Tx_Fault assert	Tx_Fault_on			1	ms
Tx_Fault assert for cooled module	Tx_Fault_on_cooled			50	ms
TX_FAULT Reset	t_reset	10			us
Rx_LOS assert delay	t_los_on			100	us
Rx_LOS negate delay	t_los_off			100	us

Pin Assignment:

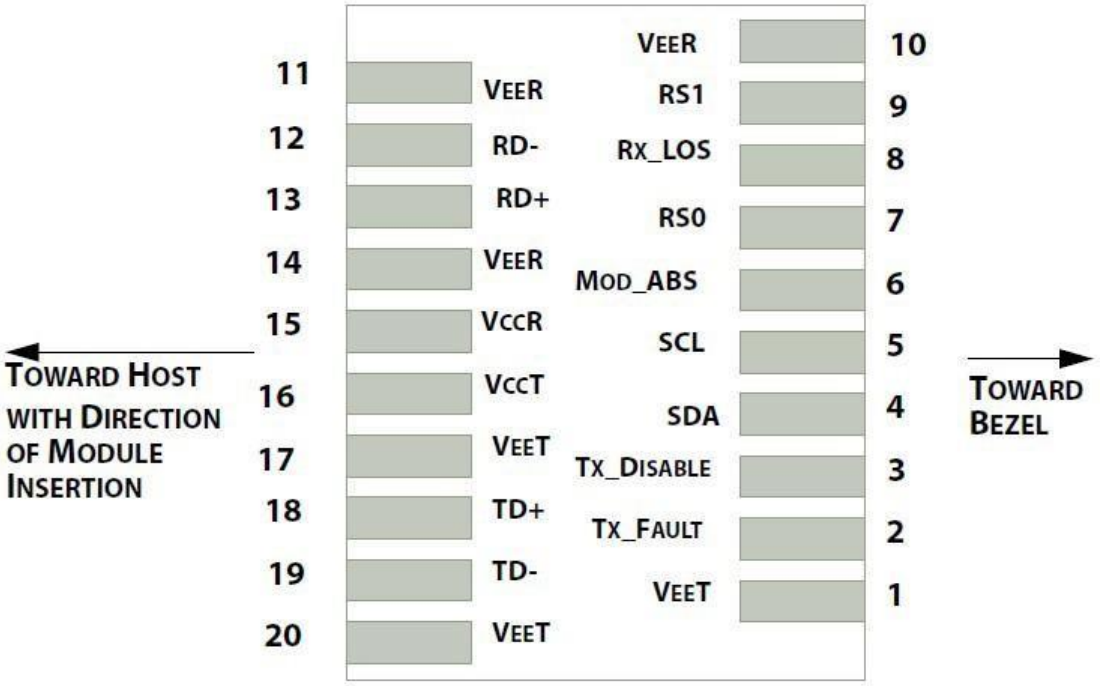

Diagram of Host Board Connector Block Pin Numbers and Name

Pin Function Definitions

PIN #	Name	Function	Notes
1	VeeT	Module transmitter ground	1
2	Tx Fault	Module transmitter fault	2
3	Tx Disable	Transmitter Disable; Turns off transmitter laser output	3
4	SDL	2 wire serial interface data input/output (SDA)	4
5	SCL	2 wire serial interface clock input (SCL)	4
6	MOD-ABS	Module Absent, connect to VeeR or VeeT in the module	2
7	RS0	Rate select0: module inputs and are pulled low to VeeT with > 30 kΩ resistorsin the module.	
8	LOS	Receiver Loss of Signal Indication	
9	RS1	Rate select1: module inputs and are pulled low to VeeT with > 30 kΩ resistorsin the module.	
10	VeeR	Module receiver ground	1
11	VeeR	Module receiver ground	1
12	RD-	Receiver inverted data out put	
13	RD+	Receiver non-inverted data out put	
14	VeeR	Module receiver ground	1

15	VccR	Module receiver 3.3V supply	
16	VccT	Module transmitter 3.3V supply	
17	VeeT	Module transmitter ground	1
18	TD+	Transmitter non-inverted data out put	
19	TD-	Transmitter inverted data out put	
20	VeeT	Module transmitter ground	1

Note:

1. The module ground pins shall be isolated from the module case.
2. This pin is an open collector/drain output pin and shall be pulled up with 4.7K-10Kohms to Host_Vcc on the host board.
3. This pin shall be pulled up with 4.7K-10Kohms to VccT in themodule.
4. This pin is an open collector/drain output pin and shall be pulled up with 4.7K-10Kohms to Host_Vcc on the host board.

Transceiver Block Diagram

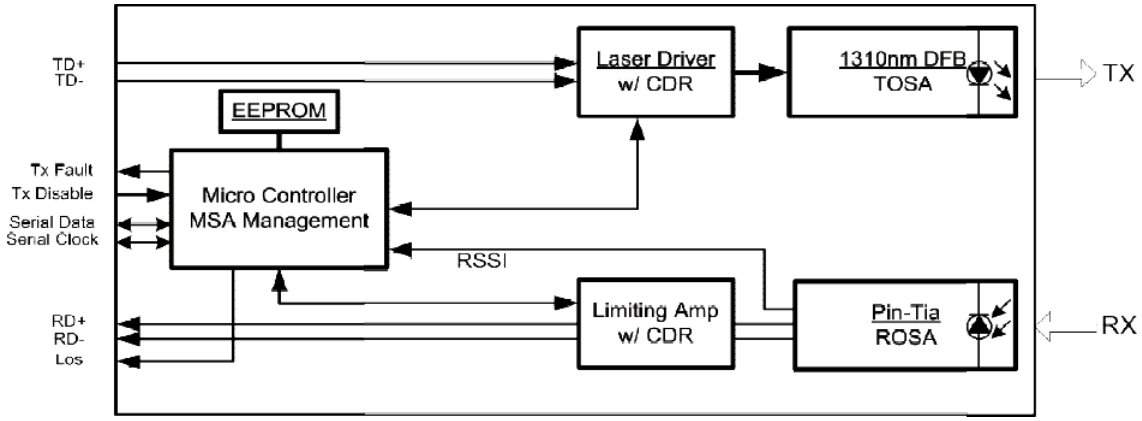

SFP Module EEPROM Information and Management

The SFP modules implement the 2-wire serial communication protocol as defined in the SFP -8472. The serial ID information of the SFP modules and Digital Diagnostic Monitor parameters can be accessed through the I^2C interface at address A0h and A2h.

The memory is mapped in Table 1.

Detailed ID information (A0h) is listed in Table 2. And the DDM specification at address A2h.

For more details of the memory map and byte definitions, please refer to the SFF-8472, "Digital Diagnostic Monitoring Interface for Optical Transceivers". The DDM parameters have been internally calibrated.

Table 1. Digital Diagnostic Memory Map (Specific Data Field Descriptions)

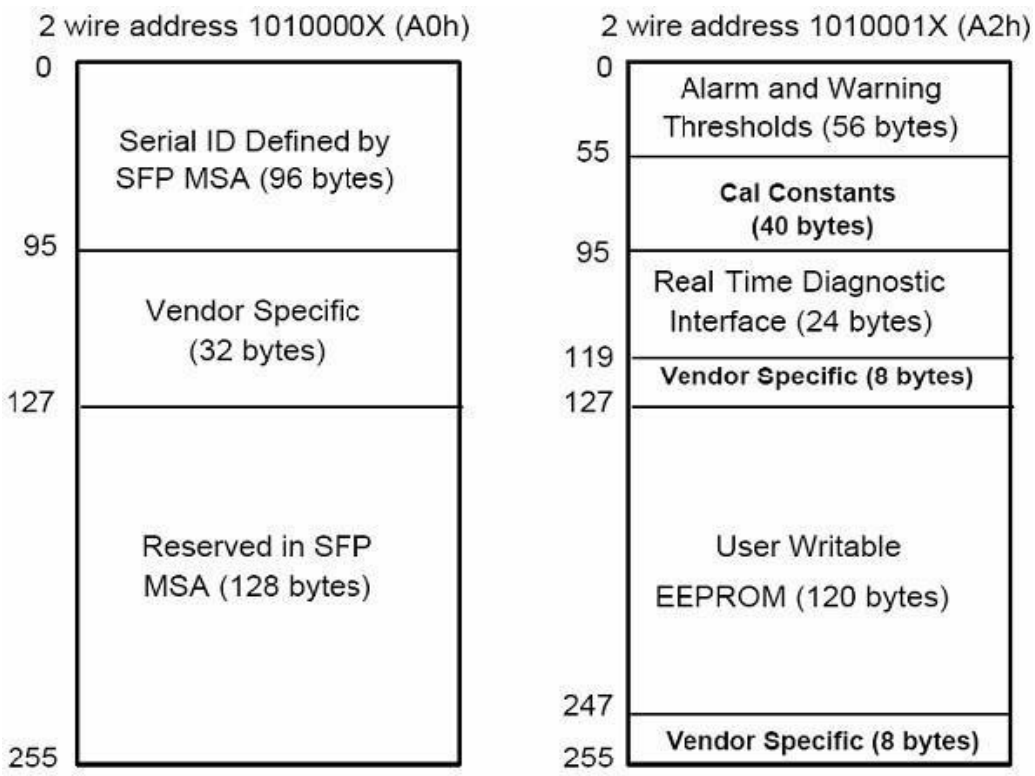

Table 2 - EEPROM Serial ID Memory Contents (**A0h**)

Data Address	Length (Byte)	Name of Length	Description and Contents
Base ID Fields			
0	1	Identifier	Type of Serial transceiver (03h=SFP)
1	1	Reserved	Extended identifier of type serial transceiver (04h)
2	1	Connector	Code of optical connector type (07=LC)
3-10	8	Transceiver	25G Base-LR
11	1	Encoding	64B/66B
12	1	BR, Nominal	Nominal baud rate, unit of 100Mbps
13-14	2	Reserved	(0000h)
15	1	Length(9um)	Link length supported for 9/125um fiber, units of 100m
16	1	Length(50um)	Link length supported for 50/125um fiber, units of 10m
17	1	Length(62.5um)	Link length supported for 62.5/125um fiber, units of 10m
18	1	Length(Copper)	Link length supported for copper, units of meters
19	1	Reserved	
20-35	16	Vendor Name	SFP vendor name: OPWAY
36	1	Reserved	

37-39	3	Vendor OUI	SFP transceiver vendor OUI ID
40-55	16	Vendor PN	Part Number: "OPXXXX" (ASCII)
56-59	4	Vendor rev	Revision level for part number
60-62	3	Reserved	
63	1	CCID	Least significant byte of sum of data in address 0-62
Extended ID Fields			
64-65	2	Option	Indicates which optical SFP signals are implemented (001Ah = LOS, TX_FAULT, TX_DISABLE all supported)
66	1	BR, max	Upper bit rate margin, units of %
67	1	BR, min	Lower bit rate margin, units of %
68-83	16	Vendor SN	Serial number (ASCII)
84-91	8	Date code	OPWAY's Manufacturing date code
92-94	3	Reserved	
95	1	CCEX	Check code for the extended ID Fields (addresses 64 to 94)
Vendor Specific ID Fields			
96-127	32	Readable	OPWAY specific date, read only
128-255	128	Reserved	Reserved for SFF-8079

Digital Diagnostic Monitor Characteristics

Data Address	Parameter	Accuracy	Unit
96-97	Transceiver Internal Temperature	±5.0	°C
98-99	VCC3 Internal Supply Voltage	±3.0	%
100-101	Laser Bias Current	±10	%
102-103	Tx Output Power	±3.0	dBm
104-105	Rx Input Power	±3.0*	dBm

Regulatory Compliance

The NSS-S25-L003 complies with international Electromagnetic Compatibility (EMC) and international safety requirements and standards (see details in Table following).

Electrostatic Discharge (ESD) to the Electrical Pins	MIL-STD-883E Method 3015.7	Class 1(>1000 V)
Electrostatic Discharge (ESD) to the Duplex LC Receptacle	IEC 61000-4-2	Compatible with standards
Electromagnetic Interference	FCC Part 15 Class B	

(EMI)	EN55022 Class B (CISPR 22A) VCCI Class B	Compatible with standards
Laser Eye Safety	FDA 21CFR 1040.10 and 1040.11 EN60950, EN (IEC) 60825-1,2	Compatible with Class 1 laser product.

Recommended Circuit:

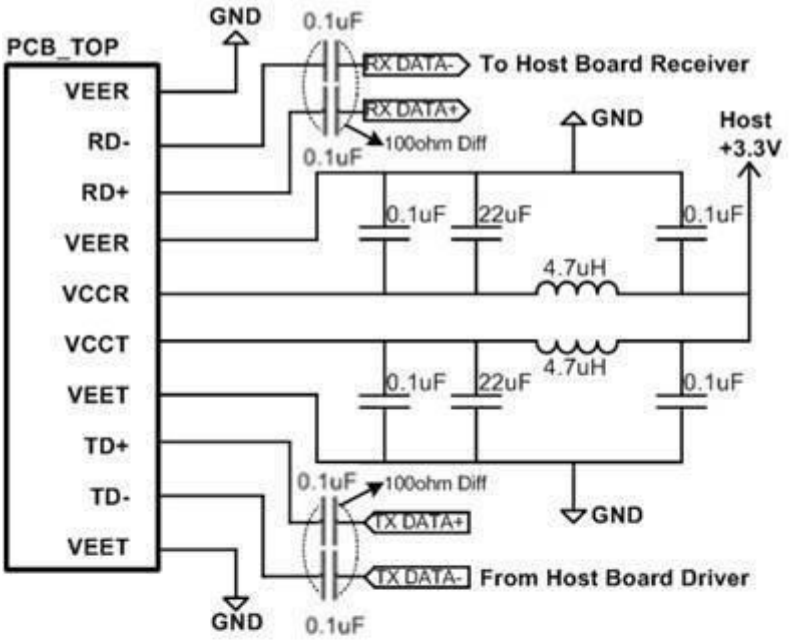

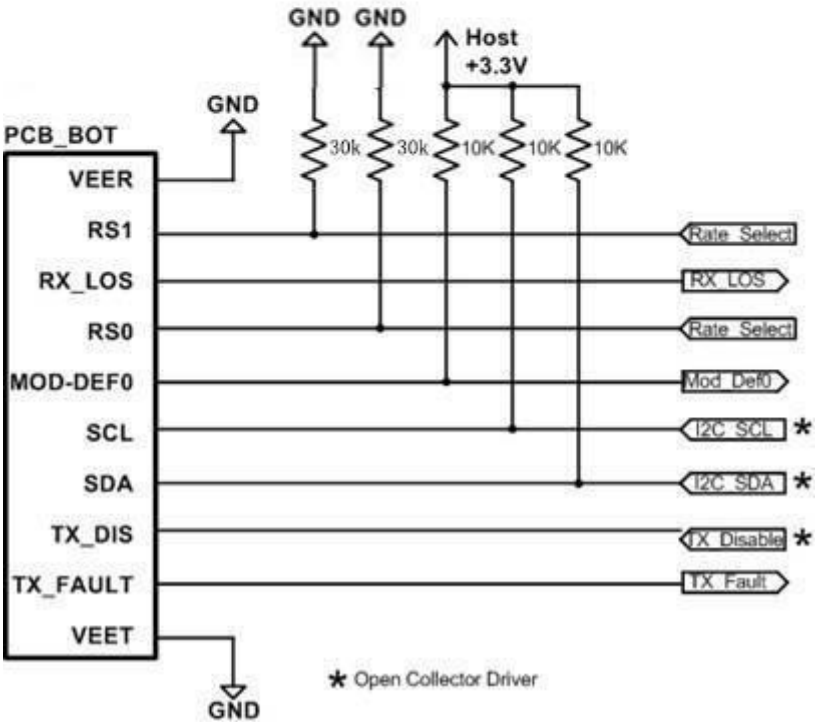

Recommended High-speed Interface Circuit

Mechanical Dimensions: